BASE304 A/B/C/D/E/F/G/H/X

3 dBd Gain Base Station Antenna for 450 MHz band

This meticulously constructed base station antenna with integrated multipurpose mounting bracket comes with a generous bandwidth which reduces the need for multiple antennas both in stock and on installation sites.

- High power antenna design
- Customer specified center frequency in X version
- No groundplane needed

ELECTRICAL SPECIFICATIONS

Frequency	380 - 400 MHz, 406 - 430 MHz, 410 - 430 MHz, 417 - 450 MHz, 430 - 450 MHz, 440 - 470 MHz, 467 - 485 MHz, 485 - 503 MHz, 406 - 512 MHz (A/B/C/D/E/F/G/H/X)
Bandwidth	For X version: Approx. 5 % of the specified Centre Frequency (CF)
Antenna Type	Half Wave Dipole
Impedance	50 ohm
Vswr	A, C, E, G, H, X: < 1.5:1, B: < 1.5:1 (406-423 MHz) and < 2.0:1 (423-430 MHz), D: < 1.5:1 (417-439 MHz) and < 2.0:1 (439-450 MHz), F: < 1.5:1 (446-470 MHz) and < 2.0:1 (440-446 MHz)
Polarisation	Vertical
Gain	3 dBd, 5.1 dBi,
Radiation Pattern	Omni Directional (Horizontal)
Half Power Beamwidth	30°
Electrical Beam-tilt	0°
Max. Input Power	300 W
Antistatic Protection	Direct Ground

Disclaimer: Every effort has been made to ensure the accuracy of the information in this product sheet. Scan Antenna reserves the right to introduce changes to this information without notice. All rights reserved.

MECHANICAL SPECIFICATIONS

Color	White, Black and Orange
Length	See Outline Drawing
Weight	Max. 1.2 kg
Mount type	Fixed Tube Mounting Bracket (included). Wall mount Bolts not included.
Mounting Place	On Tube (Ø 30 - 60 mm, vertical or horizontal) or Wall mount (mounting hole distance 68.5 mm).
Materials	Antenna: Brass, Copper, Fibreglass and Aluminium. Mounting Kit: Stainless steel A4 (AISI-316)
Survival Wind Speed	55 m/s
Operating Temperature	-55C to +70C (IEC 60068-2-1, IEC 60068-2-2)
Connectors	N-female
Ingress Protection	IP66
Vibration	IEC 60068-2-6, IEC 60068-2-64
Serial no.	On product label

ORDERING INFORMATION

23304-004A	380-400 MHz (Individually packing in Carton tube)
23304-004B	406-430 MHz (Individually packing in Carton tube)
23304-004C	410-430 MHz (Individually packing in Carton tube)
23304-004D	417-450 MHz (Individually packing in Carton tube)
23304-004E	430-450 MHz (Individually packing in Carton tube)
23304-004F	440-470 MHz (Individually packing in Carton tube)
23304-004G	467-485 MHz (Individually packing in Carton tube)
23304-004H	485-503 MHz (Individually packing in Carton tube)
23304-004X	406-512 MHz (Individually packing in Carton tube)

PACKAGING INFORMATION

Type	See "Part No."

Disclaimer: Every effort has been made to ensure the accuracy of the information in this product sheet. Scan Antenna reserves the right to introduce changes to this information without notice. All rights reserved.

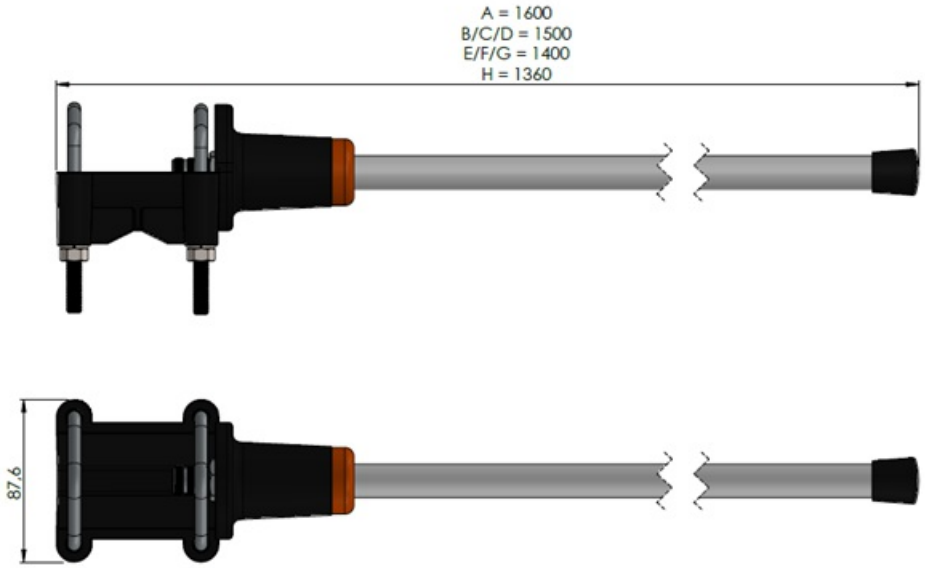

Disclaimer: Every effort has been made to ensure the accuracy of the information in this product sheet. Scan Antenna reserves the right to introduce changes to this information without notice. All rights reserved.

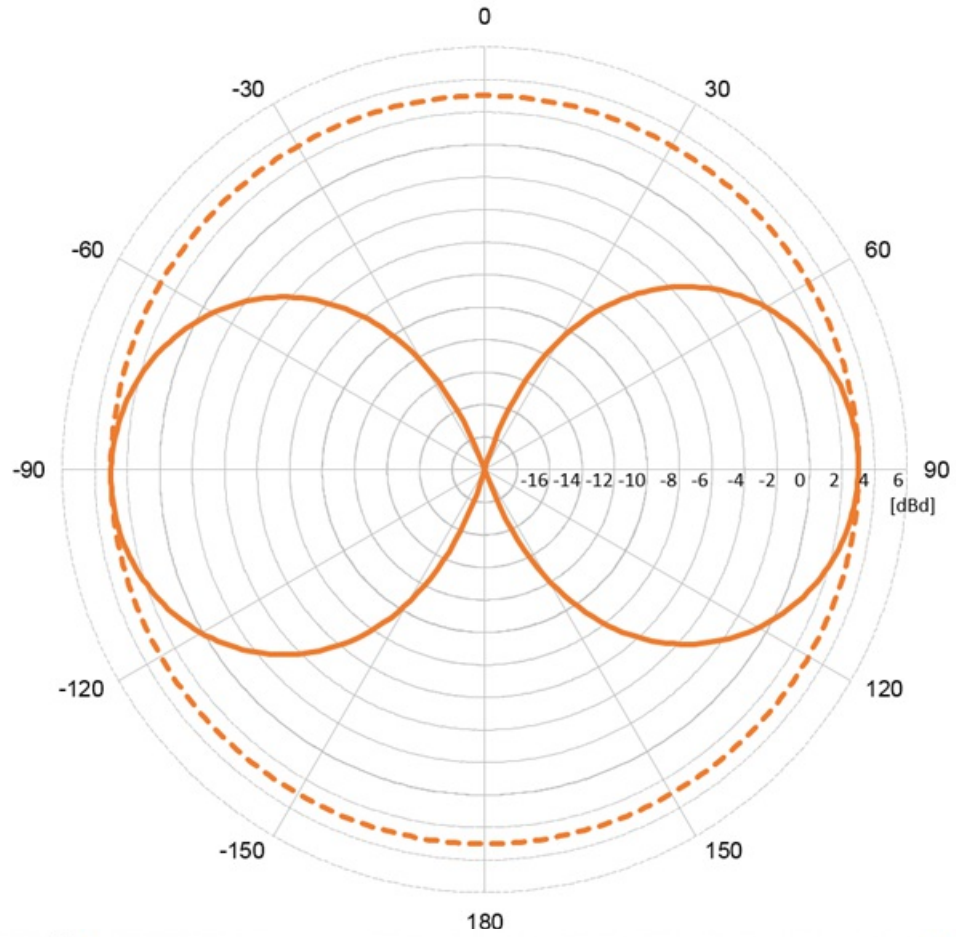

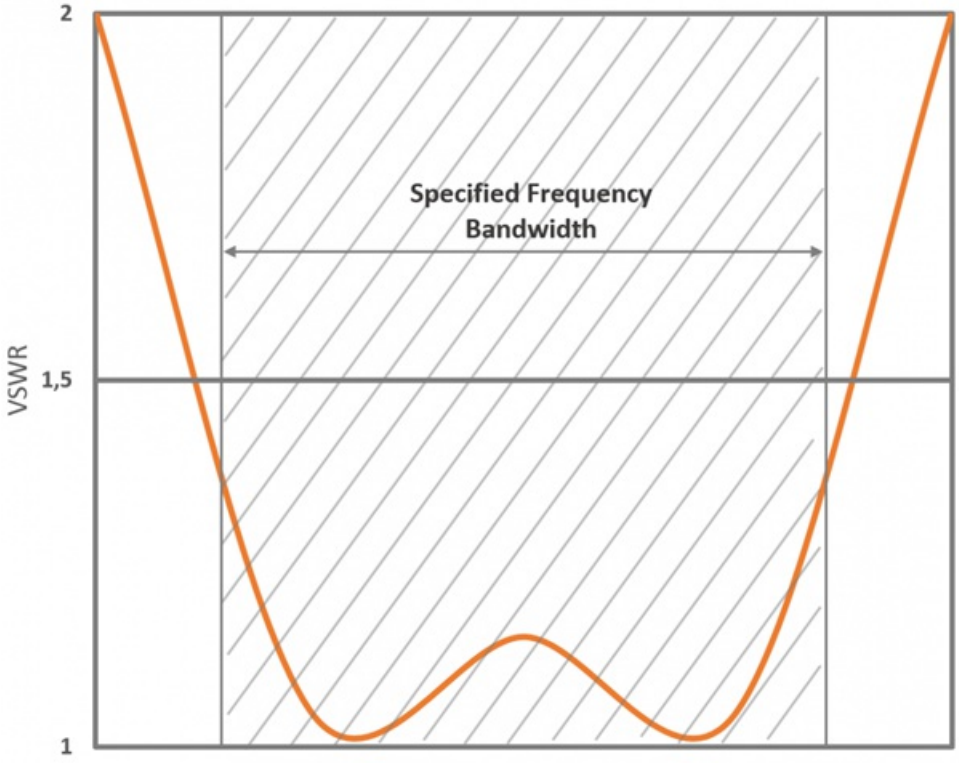

Disclaimer: Every effort has been made to ensure the accuracy of the information in this product sheet. Scan Antenna reserves the right to introduce changes to this information without notice. All rights reserved.